MP9807C

PA System CD / MP3 Player





Description

The MP9807C is a versatile audio player with a dynamic VFD display that can play various music formats including CD, VCD, DVD, MP3, MP4, WAV, etc. It supports two ways of program source supply, CD, VCD, DVD and other discs can be used, and USB interface-connected mobile hard disk can also be used to play music, featuring track direct selection, automatic playback, and 2-channel audio output, which is suitable for various occasions such as home entertainment and commercial places.

Features

- CD/MP3/MP4/VCD/DVD player.
- VFD display.
- Can select any song or any paragraph for play.
- After the POWER ON it will play in order automatically.
- Support Bluetooth playback function;
- With infrared remote control function;
- The device will prioritize reading and playing music files on the disc.

Specifications

Model		MP9807C
Frequency Response		20Hz-20kHz(±3dB)
Disk / USB	Maximum output voltage 1KHz 0dB signal	2000±200mV

export@dsppa.com / www.dsppatech.com

The specifications will be subject to change without prior notice.
Copyright © Guangzhou DSPPA Audio Co.,Ltd All rights reserved.

Bluetooth	Maximum output voltage 1KHz 0dB signal	
SNR		＞81dB
Disc Type (DISC)		DVD, CD
THD		0.005%
Wow & Flutter		Under the limited level
Output level		0dBV
Media Format		WAV, MP3
Bluetooth Distance		Best within 10M
Protection		AC fuse
Power Requirement		AC220V/50Hz
Outer Packing Size (L×W×H mm)		530×440×195
Product Size (L×W×H mm)		484×365×88
Gross Weight		8.7kg
Net Weight		6.9kg

Front / Rear Panel

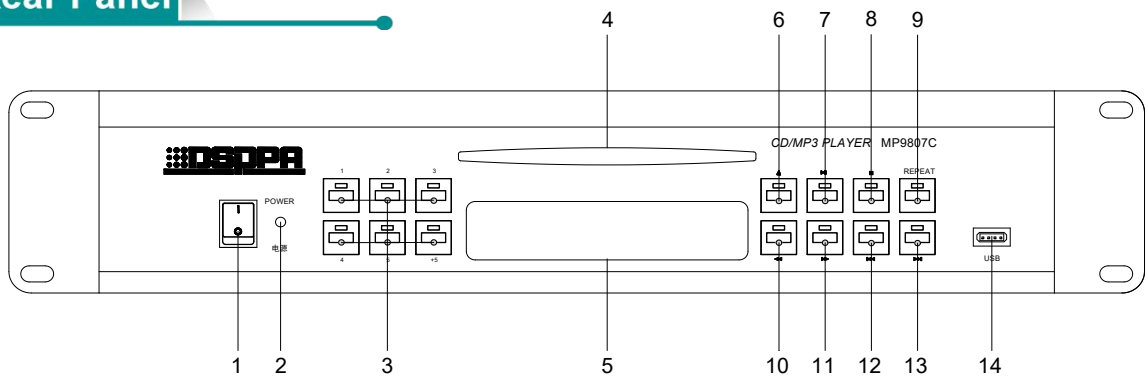

1 Power switch(1 is power on and the “power LED” is on)
2 Power indicator
3 Songs direct selection key
4 Disc door
5 VFD Display screen
6 CD in/out key
7 Play/pause keys
8 Stop keys
9 Single Repeat / All Repeat key
10 Song fast forward
11 Song rewind
12 Previous song
13 Next song
14 USB jack

Note: The DVD function of this player only outputs the audio part, no video output function.

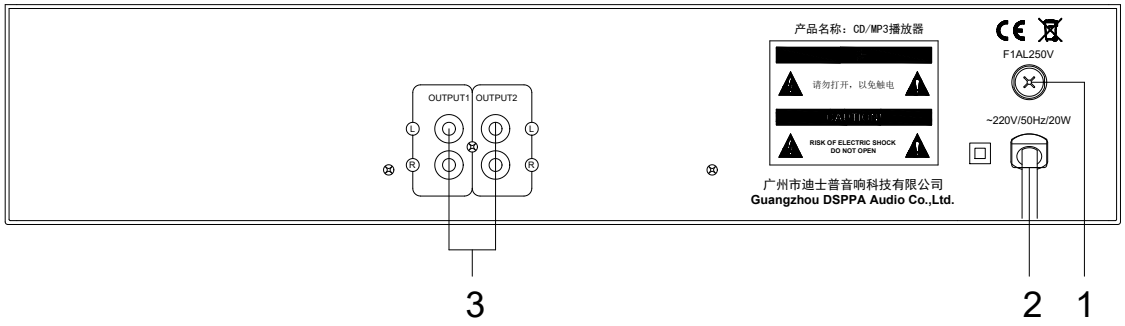

1 AC fuse 2 Power cable 3 Audio signal output socket

The specifications will be subject to change without prior notice.
Copyright © Guangzhou DSPPA Audio Co.,Ltd All rights reserved.